976 nm laser diode

350 mW / singlemode fiber / Butterfly package

Reference: 976LD-1-0-0

Technology : Single mode FP with Bragg Grating

SPECIFICATIONS	Unit	Min	Typ	Maximum
Output Power	mW	350		
Center Wavelength	nm	975	976	977
Spectral Width (FWHM)	nm			1.0
Threshold Current	A			70
Operating Current	A		670	
Operation Voltage	V			1.9
Wavelength shift w Temperature	nm/°C			0.02
Power in Band	%	90		
Polarization Extinction Ratio	dB	13		
Internal Photodiode Responsivity	mA/W	0.5		10
Internal Photodiode Dark Current	nA			100
TEC current (Case @ 75°C)	A			1.4
TEC Voltage (Case at 75°C)	V			3.2
Internal thermistor (25°C)	kOhm	9.5		10.5
Fiber type	SM98-PS-U25D-H or equivalent			
Fiber bend radius	mm	16 (abs min)		
Coating diameter	µm	230	250	270
Storage case temperature	°C	-40 (abs min)		85 (abs max)
Operating case temperature	°C	-20 (abs min)		75 (abs max)
Lead soldering temperature	°C			280
Laser diode reverse voltage	V			2.0
Polarization state	Aligned to the slow axis			

Form factor:

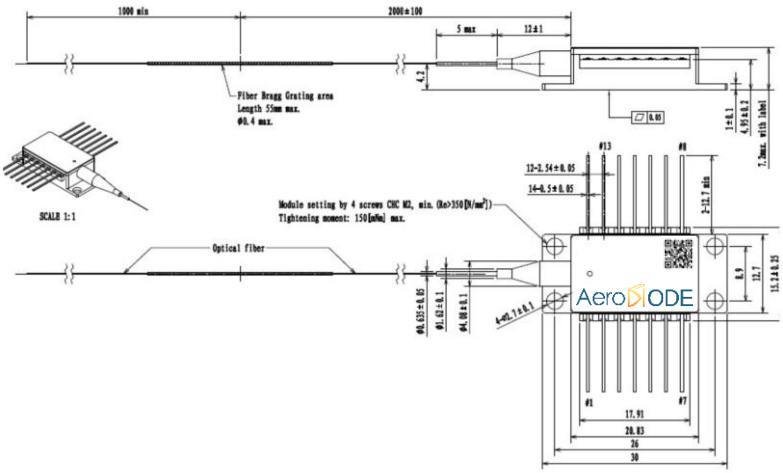

Dimensions are in mm

Laser diode pinning :

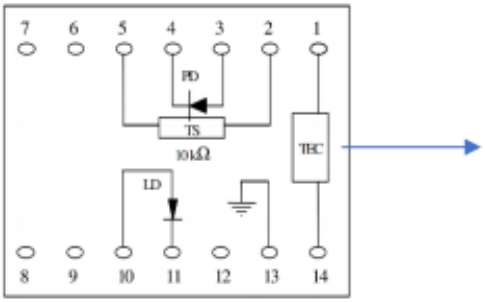

Totally floating pin-out

AERODIODE - Institut d'optique d'Aquitaine - Rue François Mitterrand
33400 Talence - France - Tél. : +33 (0)6 27 69 41 52
contact.aerodiode@aerodiode.com - **www.aerodiode.com**
SIRET 880 329 636 00018 - N° TVA intracommunautaire : FR 87880329636